REVISIONS			
LTR	DESCRIPTION	DATE	APPROVED
A	COMPUTER DRAWING	9-30-03	JL
B	CH. TITLE	5-09-06	JL

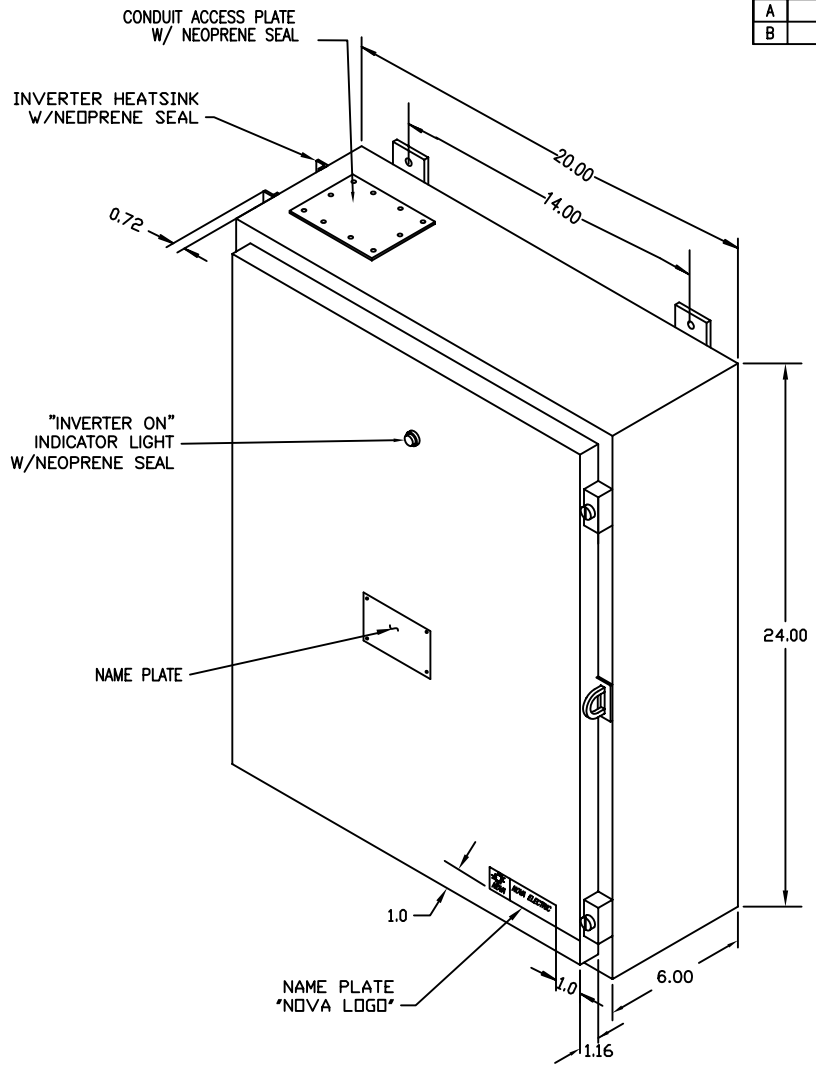

NOTES:
1. INVERTER CABINET HAS (4) MTG EARS.
   THE BOTTOM (2) CANNOT BE SEEN IN THIS VIEW.
2. FINISH: ANSI #61 GRAY, SEMI-GLOSS.
3. ENCLOSURE TYPE: NEMA 12.

UNLESS OTHERWISE SPECIFIED DIMENSIONS ARE IN INCHES. TOLERANCES: FRAC. +/-1/64 DEC. XX=+/-.02 XXX=+/-.005 ANGLES +/-2 DEG	THIS DRAWING CONTAINS PROPRIETARY INFORMATION AND MAY NOT BE REPRODUCED WITHOUT THE PERMISSION OF NOVA ELECTIRC.	NOVA ELECTRIC A DIV. OF TECHNOLOGY DYNAMICS INC. 100 SCHOOL STREET BERGENFIELD, N.J. 07621-2915
MATERIAL: N/A	DRAWN BY: J.S. DATE 8/20/91	TITLE: OUTLINE DRAWING GH 500VA-1KVA 120 & 240 VDC INVERTER
FINISH: N/A	CHECKED BY: DATE	
	APPROVED BY: HS DATE 8/20/91	SIZE: C · 985891 · REV. B
WWW.NOVAELECTRIC.COM		SCALE: NTS · CAGE: 29019 · SHEET 1 OF 1